Research on Main Engine Dynamic Fuel Consumption Model for the Inland Ship

Li Jichun[a], Deng Muhan[b], and Yang Rui [*, c]

China Waterborne Transportation Research Institute, Beijing 100088, China

[a]orangez80@163.com, [b]975496236@qq.com, [c]68861452@qq.com

*Corresponding author

Keywords: Inland Ship, Dynamic Fuel Consumption Model

Abstract: The research and establishment of dynamic fuel consumption model of ship main engine provide the most basic data for inland ship to sail at economic speed and work out trip planning. By the calculation and prediction of model, it can get the fuel consumption data at different ship speeds. Under the condition that the freight period and voyage of ship are known, it can divide the ship voyage into several parts, with water velocity of specific voyage part and ship fuel consumption, it can plan the ship speed in order to let the ship sail at economic speed in the whole voyage and realize energy conservation and emission reduction of the ship.

1. Introduction

In this paper, a type of understudied inland shallow and wide ship is studied, based on theoretical modeling and combined actual ship design parameter and model trial data, ship dynamic fuel control model is built. This paper provides data foundation for the determination of ship economic speed by quantitatively calculating and predicting the speed and fuel consumption of ship based on the combination of model and model trial data.

Based on related essential features of ship and related information and research data, this paper determines the quantitative relationship among water velocity, ship speed, main engine power and fuel consumption after theoretical analysis, based on this and applying computer simulation technology, it builds inland ship main engine dynamic fuel consumption model and lays the foundation and essential support for applied research on ship main engine dynamic fuel control optimum scheme.

2. Research on ship dynamic fuel consumption model

The main engine in propelling plant of the ship directly turns fuel into mechanical energy and by transmission shaft and propeller, it turns the torque of mechanical energy into thrust to overcome ship resistance and sail at a certain speed. If the ship resistance is large, the thrust of propeller shall also be large, so main engine of the ship will consume more fuel .

In the ship propelling system, ship, engine and propeller are in the same propelling system and are unified. When the ship is sailing under a certain condition, the operating point of engine and propeller is decided. The ship, engine and propeller form a transfer system of energy where the main engine outputs energy, transmission transfers the energy to propeller and the propeller turns the energy in rotation form into thrust, and then the thrust will overcome the resistance suffered when the ship is sailing, so the ship can sail at a corresponding speed. When ship is sailing, there are the following mathematic relationships among ship, engine and propeller:

2.1 Energy conservation condition

The power absorbed by propeller Np is equal to the power consumed by propeller, which is:

$$N_p - 2\pi K_Q \bullet \rho \bullet n_p^3 \bullet D^5 = 0 \tag{1}$$

  DOI: 10.25236/iccse.18.007

After transformation:

$$K_Q - \frac{N_p}{2\pi\rho\ n_p^3 D^5} = 0 \tag{2}$$

2.2 Ship fuel consumption

When the ship is sailing at a certain speed Vs, the unit time fuel consumption is:

$$b_e = N_e \bullet g_e = \left[\frac{EHP(V_s)}{\eta_e \eta_r \eta_h \eta_p}\right] \bullet g_e \tag{3}$$

Where:

$EHP(V_s)$ ——effective thrust power (kW);

The following relationship is deduced from the above formulas:

$$EHP(V_s) = T_e \bullet V_s = (1-t) K_T \bullet \rho \bullet n_p^2 D^4 \bullet V_s \tag{4}$$

$$EHP(V_s) = N_e = 2\pi K_Q \bullet \rho \bullet n_p^3 \bullet D^5 \tag{5}$$

Because

$$n_p = \frac{(1-\omega)V_s}{JD} \tag{6}$$

Put it into the above two formulas:

$$EHP(V_s) = (1-t) K_T \bullet \rho \bullet \left(\frac{1-\omega}{J}\right)^2 \bullet D^2 \bullet V_s^3 = 2\pi K_Q \bullet \rho \bullet \left(\frac{1-\omega}{J}\right)^3 \bullet D^2 \bullet V_s^3 \tag{7}$$

Based on the above data, the relationship between the fuel consumption rate of main engine and output power of main engine is as follow:

$$g_e = 0.291 - 3.291e^{-4} N_e + 6.427e^{-7} N_e^2 - 7.373e^{-10} N_e^3 + 3.65e^{-13} N_e^4 \tag{8}$$

So the fuel consumption in unit time when the ship is sailing at Vs is:

$$b_e = N_e \bullet g_e = 0.291 N_e - 3.291e^{-4} N_e^2 + 6.427e^{-7} N_e^3 - 7.373e^{-10} N_e^4 + 3.65e^{-13} N_e^5 \tag{9}$$

Where

$$N_e = \left[\frac{EHP(V_s)}{\eta_e \eta_r \eta_h \eta_p}\right] = \frac{2\pi K_Q \bullet \rho \bullet \left(\frac{1-\omega}{J}\right)^3 \bullet D^2 \bullet V_s^3}{\eta_e \eta_r \eta_h \eta_p} \tag{10}$$

2.3 Simulink Study of Propeller Characteristics

Modeling the related mathematical formula by using Simulink of MATLAB, the dynamic fuel consumption model of ship main engine is as shown in Figure 1.

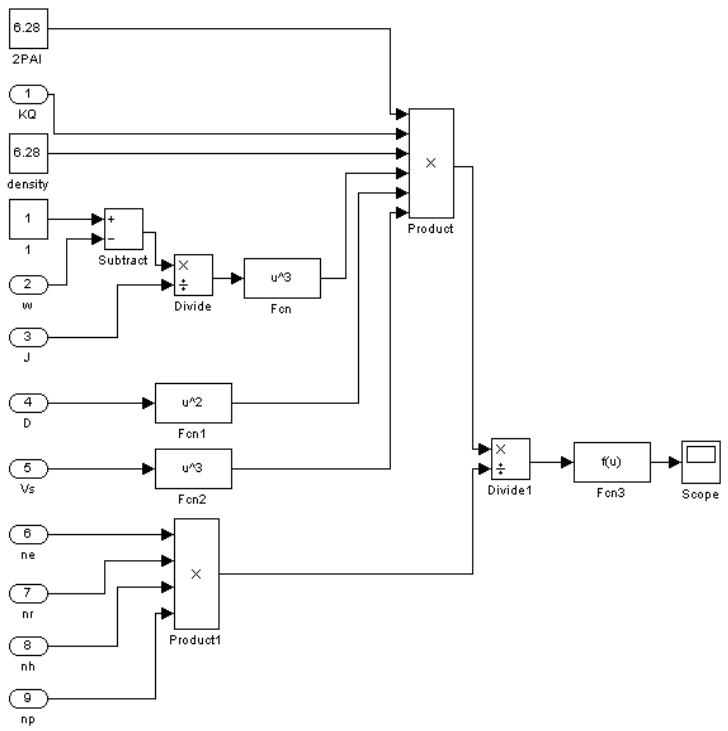

Figure 1 Dynamic fuel consumption model of ship main engine

3. Calculation and prediction of ship speed and fuel consumption

By design parameter of ship and model experimental parameter, we can get the torque coefficient of ship KQ, wake fraction ω, advance coefficient J, diameter of propeller D, shaft transmission efficiency η_e, relative rotative efficiency η_r, hull efficiency η_h and relative efficiency of propeller η_p. By using the model established by MATLAB, we can calculate and predict the fuel consumption in unit time when the ship is sailing at Vs.

The curve of dynamic fuel consumption of ship main engine is as shown in Figure 2.

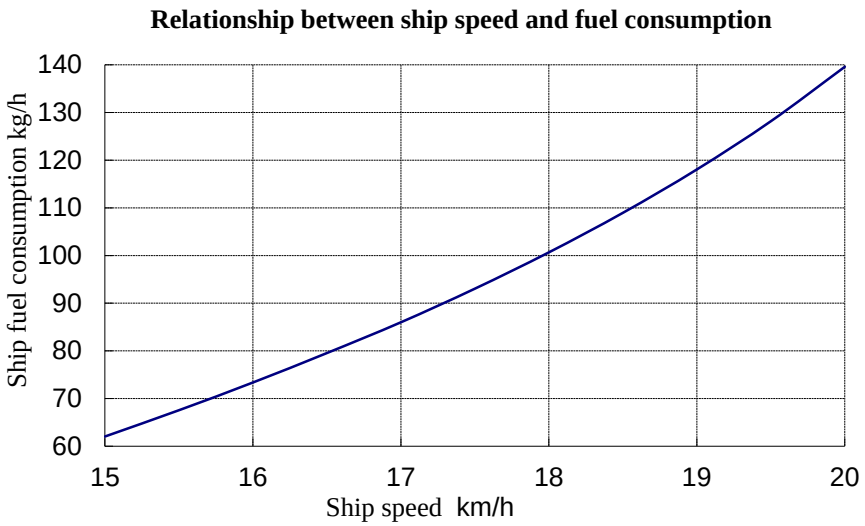

Figure 2 Curve of dynamic fuel consumption of ship main engine

4. Conclusions

Based on the research of this paper, the dynamic fuel consumption model of ship main engine

can be further improved and amended. The fuel consumption for ship to sail can be calculated and predicted by inputting actual ship parameters and dynamic fuel control software can be developed. Combing with model data, we can work out the sailing speed of ship to guide the ship to sail at economic speed. By actual ship application of dynamic fuel consumption software of ship main engine, the management level of inland ship can be improved and green sailing of inland ship can be promoted.

References

[1] Liu Y, Shen L, Li Z, et al. Research on the Effect of Environmental Improvement on Prefabricated Housings Based on DSR Model[J]. Journal of Applied Science and Engineering Innovation, 2018, 5(3): 84-89.

[2] TP Gourlay, A brief history of mathematical ship-squat prediction, focussing on the contributions of E.O. Tuck[J]. Journal of Engineering Mathematics , 2011 , 70 (1-3) :5-16

[3] P Mucha, G Deng, T Gourlay, OE Moctar, Validation studies on numerical prediction of ship squat and resistance in shallow water[J]. 2016 International Conference on Ship Manoeuvring

[4] HE Kim, SH Seo, YG Lee. An Experimental Study on the Shallow Water Effect on Series 60 Hull Form[J]. Journal of the Society of Naval Architects of Korea, 2000 , 37 (3) :21-26

[5] P. Xu, Research and application of near-infrared spectroscopy in rapid detection of water pollution, Desalination and Water Treatment, 122(2018)1-4.

[6] A Fan，X Yan，Q Yin，X Sun，D Zhang. Clustering of the Inland Waterway Navigational Environment and Its Effects on Ship Energy Consumption [J]. Proceedings of the Institution of Mechanical, 2017,231 (1) :57-69

[7] K Kijima, Y Nakiri, Y Tsutsui, M Matsunaga. Prediction method of ship manoeuvrability in deep and shallow waters[J]. Maneuverability, 1990

[8] Liu H, Li X. Research on Long-term Incentive Effect of Local Government Environmental Protection[J]. Journal of Applied Science and Engineering Innovation, 2018, 5(2): 42-46.